A complete distribution system

For all terminal power distribution needs Gewiss has a two-pronged offer: the tradition of the 68 Q-DIN range, an extremely versatile system thanks to the 19 different enclosures for holding industrial and residential sockets, and the innovation of the 66 COMBIBLOC Range, a family of extremely compact industrial boards and sockets which is ideal in all commercial and advanced commercial systems.

GW assembled and wired boards

A broad offer, in terms of sizes and configurations, of prewired versions certified as Distribution Board Units (DBUs) in compliance with the requirements of the EN 60439 - 3 Standard.

AS customised wired and assembled distribution boards

Gewiss also proposes the execution and supply of wired and assembled distribution boards tailored to specific customer needs. Contact Customer Technical Assistance Service (SAT) for feasibility, quotes and delivery times for special versions.

Empty boards

The empty boards are suitable for free configuration by the customer, who can choose from over 700 different combinations of Q-DIN and COMBIBLOC boards in the Prearranged Construction System, all certifiable as DBU boards.

AESSE

Selection, quotation and certification software for DBU boards

CHARACTERISTICS AND ADVANTAGES

	COMMERCIAL	INDUSTRY	OUTDOORS
Solutions with non-interlocked sockets IP 44 / IP 67	**Industrial kitchens** Environments with possibility of accidental impacts and presence of chemical substances	**Warehouses** Environments with presence of dust and possibility of accidental impacts	**Harbour areas, sports facilities** Environments with presence of water, dust and exposure to UV rays
Solutions with interlocked switch socket-outlets IP 44/IP 55	**Supermarkets** Connection of refrigerated counters	**Workshops and production departments** Machine connection, protection and control	**Agriculture, worksites** Temporary connection and protection
Solutions with COMPACT COMBIBLOC interlocked switched socket-outlets	**Trade fairs, exhibitions and public premises** (high aesthetic impact)		
Mixed solutions with industrial and residential sockets - IP 44 / IP 55		**Maintenance Departments** Movable and temporary connection of tools	
Empty boards	The empty versions, which are freely configurable, enable execution of the best solution for the various system and environmental needs.		

Characteristics and advantages

Terminal block arrangement
The Q-DIN 8, 12 and 18 are arranged for fitting dedicated terminal blocks aimed at rationalising the connection of neutral and earth wires.

EN 50022 adjustable rail
The rail can be adjusted to adapt the height of the modular equipment without needing height adapters.

Triangular key lock
In Q-DIN 12 and Q-DIN 18 boards.

High impact resistance
The IK 09 class makes the board suitable also for heavy-duty applications.

Universal
Wire entry with IP 66 cable glands and IP 66 pipe/box connections.

Hinged cover opening
On both sides with sealable screws (Gewiss patent).

Transparent door
For checking the duty status of the devices installed.

Double insulation
Avoids earthing, thanks to the screwcaps or fixing brackets.

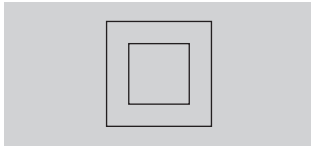

Flexibility
The flanged panel allows the housing of non-interlocked sockets, residential sockets, COMBI 27 lids for housing push-buttons, indicators, selectors.

Installation versatility

Versions with horizontal interlocked switched IP 44 socket-outlets with and without fuse-holder bases.

Versions with horizontal interlocked switched IP 55 socket-outlets with and without fuse-holder bases.

Versions with IP 44 / 67 non-interlocked sockets, residential sockets, COMBI 27 lids for housing push-buttons, indicators, selectors.

CHARACTERISTICS AND ADVANTAGES

Fixed application

There are many fixed, surface-mounting and flush-mounting possibilities for Q-DIN 12 and 18, on posts, work benches and floor pillar GW68441 (Q-DIN 4), for maximum installation versatility.

Mobile applications

Thanks to the high resistance to impact and external agents, the Q-DIN Range is suitable for use in construction sites and in all environments requiring movable and temporary power supply.

Group assembly

The Q-DINs can be placed in banks using the GW26406 watertight connection.

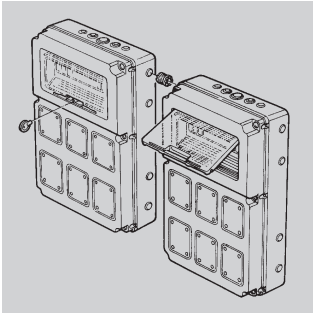

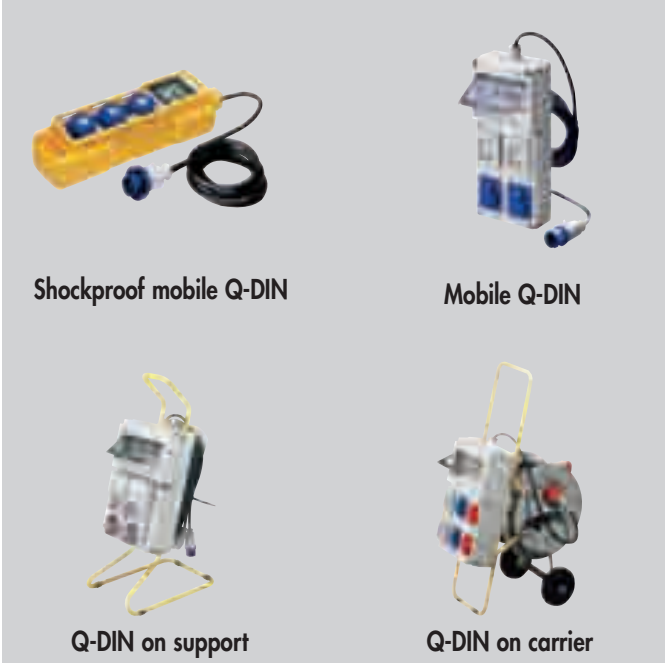

Compatibility flanged Q-DINs/installable sockets

			INSTALLABLE SOCKETS										
			IP 55	IP 44	IP 67	IP 44	IP 67	IP 44	IP 44	IP55	IP55	IP55	IP55
	Gewiss Code	No. installable sockets	max. 2 mod. SYSTEM	16A	16A	32A	32A	16-32A	16-32A	16-32A	GW 66 709	16-32A	GW 66 710
Q-DIN 4	GW 68 017	1	•	•	•								
	GW 68 018	2	•	•	•								
	GW 68 001	3	•	•	•								
Q-DIN 8	GW 68 003	4	•	•	•								
	GW 68 019	2						•					
Q-DIN 12	GW 68 005	3	•	•	•	•	•						
	GW 68 006	2						•					
	GW 68 008	6	•	•	•	•	•						
	GW 68 009	4						•					
	GW 68 010	3 (6)*								•	•		
	GW 68 011	2 (4)*										•	•
Q-DIN 18	GW 68 013	8	•	•	•	•	•						
	GW 68 014	4							•				
	GW 68 015	4+4 (12)*	•	•	•					•	•		
	GW 68 016	3 (6)*										•	•

* By means of flanged panel.